FREESTANDING: MAJESTIC

120cm Majestic Electric Oven & & 5 Burner with Simmer Plate Cooktop

M120SDMP

ILVE

MADE IN ITALY | 24 MONTH WARRANTY | 120CM WIDE | EXPERT MODE | COOL TOUCH

1,625 RAL COLOURS * consult with ILVE | DIGITAL DISPLAY | 11 MULTI-FUNCTION MODES * Main Oven Only | BRASS BURNER | COOKING LEVELS

A true kitchen centerpiece that is sure to demand attention. Featuring the same cook top options as the ILVE Quadra range, these exceptional cookers will compliment any kitchen and its cook.

While a highlight of the Majestic range is its 700mm depth, the standard functions you expect from ILVE, including the electric rotisserie, precision thermostatic control, concealed grill element, programmable timer and turbo wave cooking feature, not to mention the digital food monitor - have not been forgotten.

The unique style of the Majestic Freestanding Ovens stands out above the rest and to enhance this, ILVE offers the ability to create a customized and individual look. Choose between the traditional (Majestic) or contemporary (Majestic Techno) style; pick one of six colours with brass, chrome or bronze fittings; and select from five available sizes (70cm, 90cm, 100cm, 120cm and 150cm). Also available are matching range hoods with infrared heat lamps (AM series).

Living up to expectations, ILVE is bringing incomparable design, choice and functionality to the everyday Australian kitchen.

Fitting

Majestic Knobs and Handles in Brass

Majestic Knobs and Handles in Chrome (X)

Majestic Knobs and Handles in Bronze (Y)

Colour Palette

Bright White | Stainless Steel | Antique White | Blue

Matt Black | Emerald Green | Burgundy

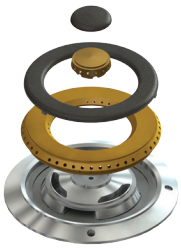

Pictured: ILVE Brass Burner

18112016

FREESTANDING: MAJESTIC

120cm Majestic Electric Oven & & 5 Burner with Simmer Plate Cooktop

M120SDMP

ILVE

Model M120SDMP

Electric Oven

- Two Electric Ovens: Select 11+5 multifunction cooking modes
- 110 litre oven capacity oven 1
- 40 litre oven capacity oven 2
- Easy clean vitreous enamel interior finished in smooth black
- Electronic Roast Probe (main oven ONLY)
- Electric Rotisserie in both Ovens
- AS304 stainless steel commercial style control panel and knobs
- Dual Recessed full width grill element
- Digital programmable timer (main oven ONLY)
- Control panel and door cooling fan
- Triple glazed glass door for safer, cooler door temperatures
- Catalytic self cleaning system (main oven ONLY)
- Large baking trays
- Stainless steel fan fat filter (main oven ONLY)
- Removable oven door and inner door glass
- Storage drawer
- Sealed oven: lower temperatures, less food spatter, moister fresher tasting roasts
- Precision thermostatic control 0°C–250°C
- New Turbowave Quickstart preheating function 0°C –175°C in 8 minutes (main oven ONLY)

Gas Cooktop

- 120cm gas cooktop
- Triple ring all purpose Brass wok burner (5 kW – European Tested) and 5 regular gas burners
- ILVE's cast iron Simmer Plate / Targa Top surface
- Main Wok Burner featuring dual control operation
- 40mm Curved cooking surface facia edging
- Precision burner controls each with position accurate thermostatic control
- Heavy Duty cast iron trivets and burner caps
- All gas burners fitted with flame failure safety devices
- Deep recessed spill trays
- Easy clean removable trivets and burner caps
- Solid brass burners
- AS 304 Stainless Steel construction

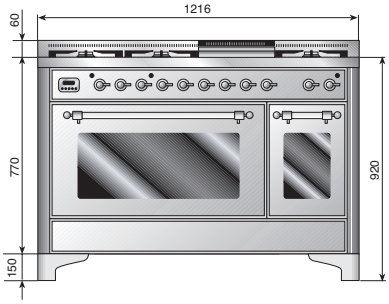

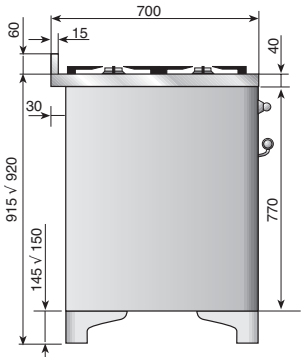

For installation specifications, please colsult with ILVE. For optimum installation, we recommend using the actual product as the best guide.

120cm Majestic 6 Burner
Model M120SDMP
Total Electrical Load (Kw) 5.5
Total Gas 'NG'Consumption (Mj/h) 62.7

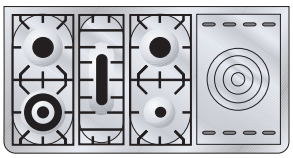

18112016

Australia National Telephone Number 1300 MYILVE (694 583) New Zealand Telephone Number 0508 458 369
ILVE showrooms are open Tuesday - Friday from 9am-5pm and Saturdays 10am-4pm. CLOSED Monday & Sunday

ilve.com.au

NSW & ACT (Head Office)
48-50 Moore Street
Leichhardt
F 02 8569 4699

VIC & SA
1211 Toorak Road
Camberwell
F 03 9809 2155

QLD
1/42 Cavendish Road
Coorparoo
F 07 3397 0850

WA & NT
Unit 10/55 Howe Street
Osborne Park
F 08 9201 9188

TAS (Crisp Ikin)
3 Pear Avenue
Derwent Park, 7009
P 03 6272 7386

New Zealand
PO Box 11.160
Sockburn Christchurch
F 03 344 5906

DISCLAIMER
Eurolinx PTY LTD, trading as ILVE Appliances, is continually seeking ways to improve the design specifications, aesthetics and production techniques of its products. As a result alterations to our products and designs take place continually. Whilst every effort is made to produce information and literature that is up to date, this brochure should not be regarded as an infallible guide to the current specifications, nor does it constitute an offer for the sale of any particular product. Product dimensions indicated in our literature is indicative only. Actual product only should be used to define dimension cutouts. Distributors, and retailers are not agents of ILVE Appliances and are not authorized to bind ILVE Appliances by any express or implied undertaking or representation.